1515 PROOF Fixed stretcher

Fixed stretcher with rigid bed

FEATURES

Fixed stretcher built in anodized aluminium with painted rigid back rest and bed. Resistant and easy to clean. Trendelenburg and Fowler positions.Suitable for our ambulance trolleys (TITANUS) or as a hand-carried stretcher.

Available in the version with anti-vibration (no Trendelenburg and no Fowler)

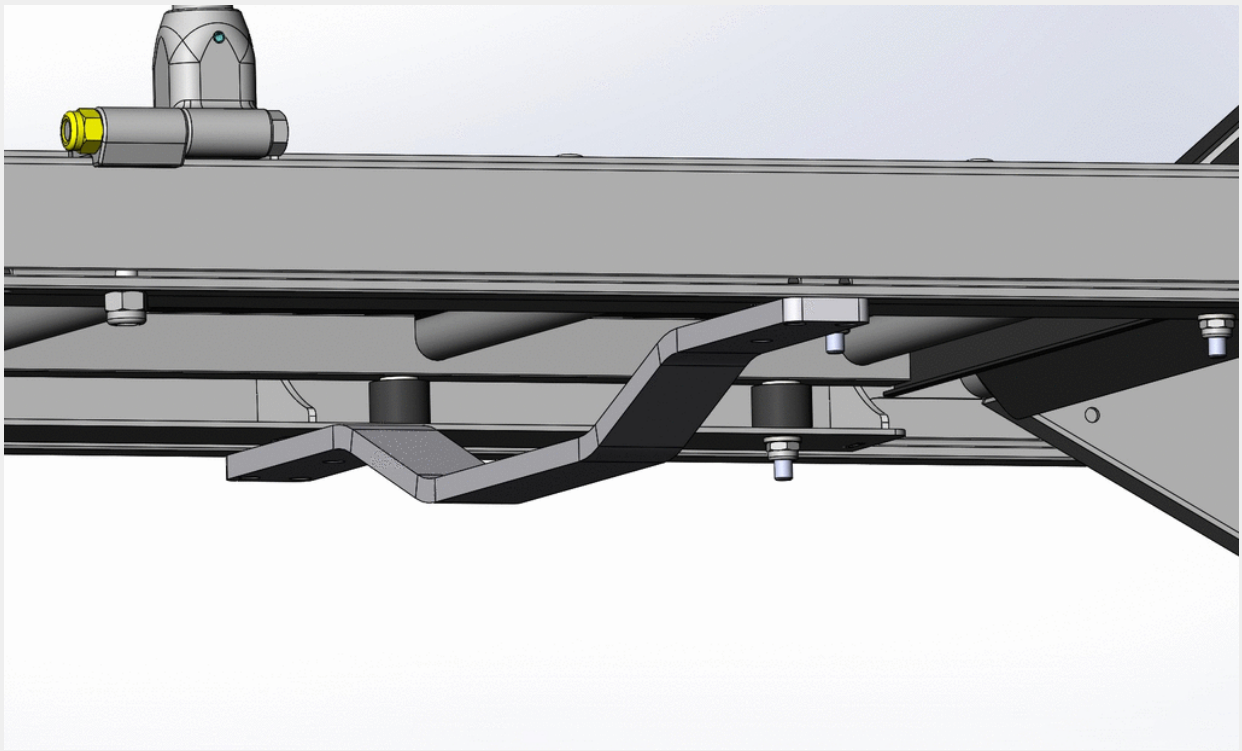

The vibration-absorbing element of the stretcher is made up of six natural rubber anti-vibration mounts which contribute to the reduction of any stress on the stretcher both when used on the trolley and especially during transport by ambulance.

- 4 extractable and adjustable handles
- 4 wheels diam. 100mm
- adjustable backrest 75 degrees
- Supplied with 2 belts (art. 608-A/MEB or 608-N/MEB), n. 3 belts (art. 605C), n.1 belt (art. 612/AN-2/MEB or 612/N-2/MEB) and 1 mattress (art. 7014)
- Foldable side rails

Device certified according to the European harmonized standards UNI EN 1865 - UNI EN 1789

MAIN FEATURES

Size	Adults
Usage	Transport
Lying surface	With Trendelenburg and Fowler
Height (cm)	16
Width (cm)	55
Length (cm)	196
Length with extended handles (cm)	233
Weight (kg)	20,8
Loading capacity (kg)	170
Wheel type	4 Small Fixed Wheels
10G Certification	☑
Material	Anodized aluminium HDPE (High-density polyethylene)

IMAGES

SEE ALSO

Fixed stretcher 1510 PROOF
Fixed stretcher with nylon cover

Titanus 7060/4RG PROOF
Certified stainless steel variable height trolley with four rotating wheels

Titanus 7062/4RG PROOF
Stainless steel variable height trolley with four rotating wheels high version

ACCESSORIES

936/A
Phleboclysis stand for stretchers Art. 1510 Proof and Art. 1515 Proof

STANDARD ACCESSORIES

7014/A
4 pcs. Skay fire-proof electrowelded mattress

608/A-MEB
2 pieces orange belt with metallic hook and MeBer band (L. 155 cm)

605/C
Orange belt in one piece with plastic buckle mm 50 and ME.BER. ribbon for proof mattresses

612/AN-2/MEB
Adjustable thoracic abdominal belt orange/black with MeBer band and 4 points fastening for self loading stretchers and sedan chairs